REV.	DATE	DESCRIPTION	BY
1	24/06/05	AS PER COMMENTS ON REV. 0	
2	03/08/05	AS PER COMMENTS ON REV. 1	

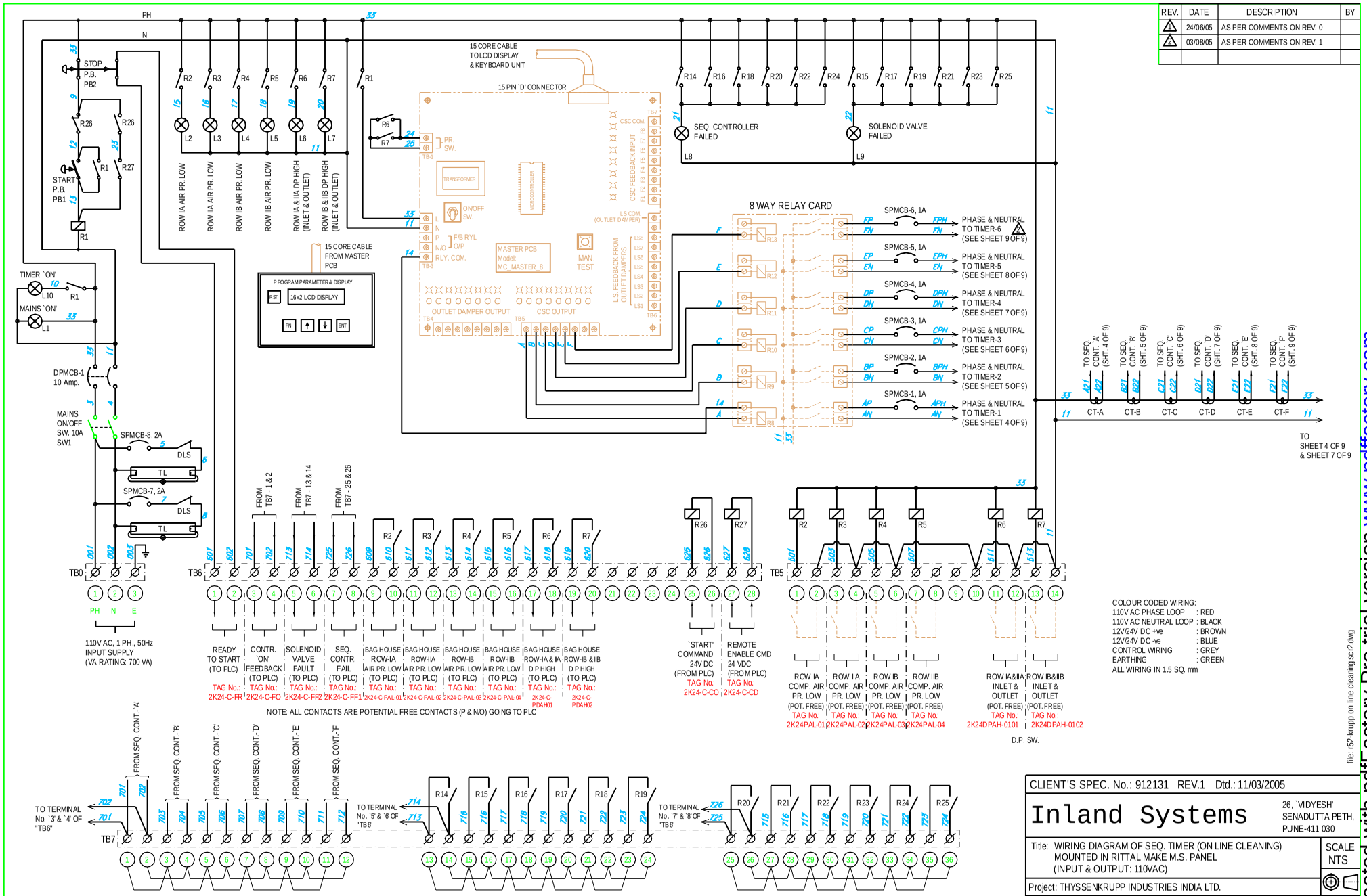

CLIENT'S SPEC. No.: 912131 REV.1 Dtd.: 11/03/2005

Inland Systems

26, `VIDYESH' SENADUTTA PETH, PUNE-411 030

Title: WIRING DIAGRAM OF SEQ. TIMER (ON LINE CLEANING) MOUNTED IN RITTAL MAKE M.S. PANEL (INPUT & OUTPUT: 110VAC)

SCALE NTS

Project: THYSSENKRUPP INDUSTRIES INDIA LTD.

Client: RIECO INDUSTRIES LTD. | RIECO ITEM CODE No.: 0042282921

DRN	SSB	30/04/2005	PROJECT: THYSSENKRUPP/GULF CEMENT
CHKD			Drawing No.: X'1360-02
APVD			SHEET 3 OF 9

SIZE A3

REV. 2

PDF created with pdfFactory Pro trial version www.pdffactory.com